OMEGA COMPRESSORS

For us, it's not just business. It's personal.

TK-50120

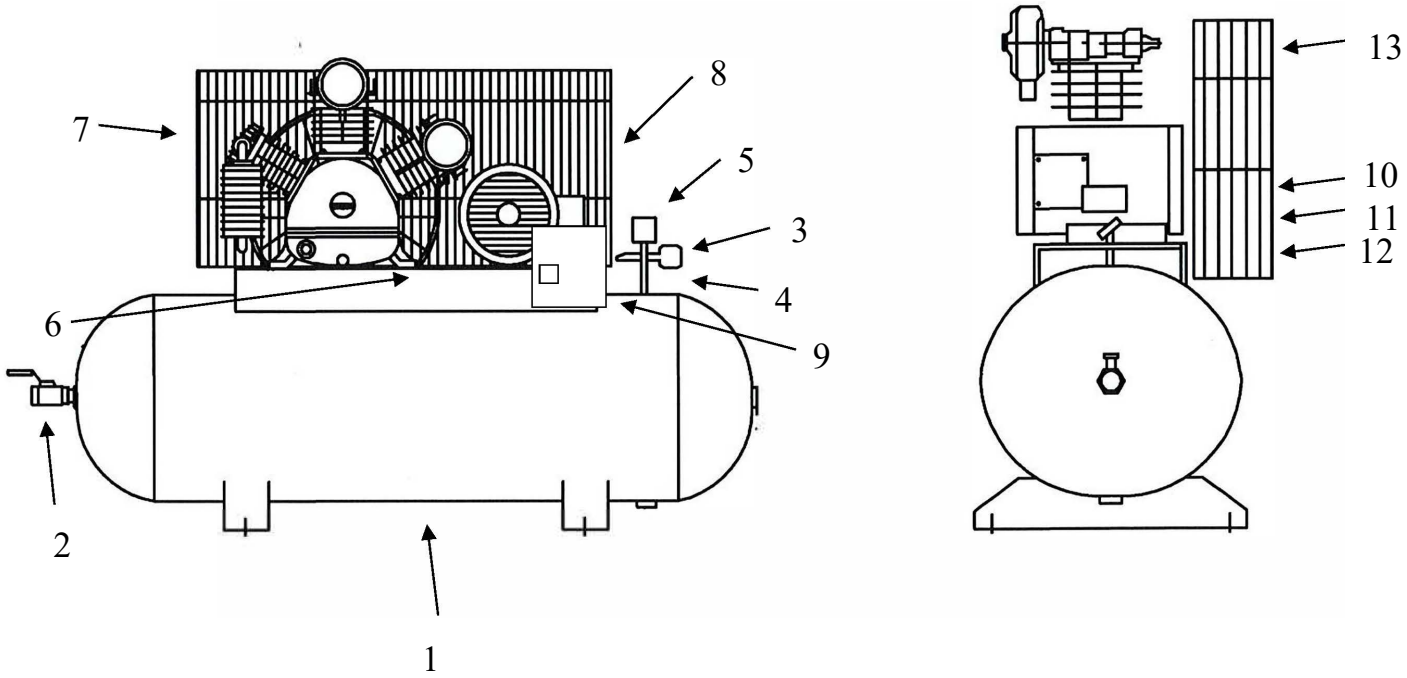

Spare Parts List

Ref. No.	Description	Part Number	Qty.
1	Horizontal Receiver	AR-H120	1
2	Ball Valve	BV-75	1
3	Premium Gauge	GAD-20B2-300	1
4	Safety Valve	SV25-200	1
5	Pressure Switch	PSHD-U120150	1
6	Check Valve	CV-N751075ST	1
7	Pump	TK-50	1
8	Motor	MO-5-01	1
		MO-5-02	1
		MO-5-03	1
		MO-5-04	1
		MO-5-05	1
9	Magnetic Starter	MS-5-01	1
		MS-5-02	1
		MS-5-03	1
		MS-5-04	1
		MS-5-05	1
10	Sheave/Pulley	2MAL82	1
11	Bushing	LX1-1/8	1
12	A69 Belt	VBA69	2
13	Belt Guard	BG-3	1

OMEGA COMPRESSORS

For us, it's not just business. It's personal.

MODEL: TK-50

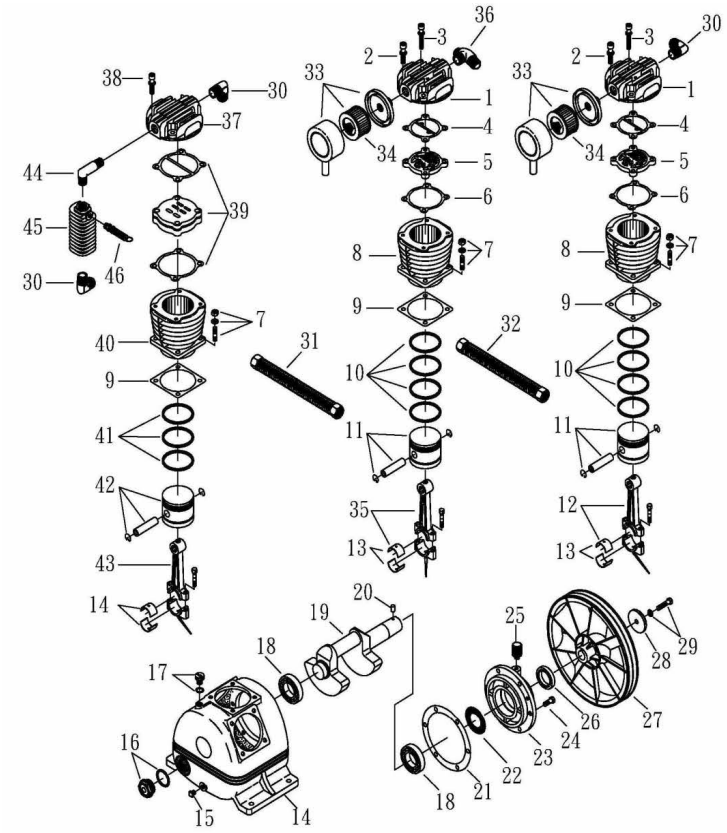

SPARE PARTS LIST

NO: QC-1911

REF. NO.	DESCRIPTION	PART NO.	QTY.	REF. NO.	DESCRIPTION	PART NO.	QTY.
1	Cylinder head	3101018	2	24	Hexagon bolt	2B00-SM10*025	6
2	Allen bolt set	3B01-M10*050V	8	25	Breathing cover	2321008	1
3	Allen bolt set	3B01-M06*055Z	4	26	Oil seal	2N50-TC30*50*11	1
4	Cylinder head gasket	2G01-011C	2	27	Pulley	3PBF-145A230M	1
5	Inlet&Exhaust valve	3B13-AP80	2	28	Pulley washer	2B34-13*52*14	1
6	Valve seat gasket	2G03-005C	2	29	Hexagon bolt set	3B00-SM12*050V	1
7	Double head screw set	3B11-003-A	12	30	Exhaust elbow	2N06-06T06H	3
8	Cylinder	3201015	2	31	Exhaust tube set	3B2-06*490	1
9	Cylinder gasket	2G04-009	3	32	Exhaust tube set	3B2-06*235	1
10	Piston ring set	3B32-80N	2	33	Air filter	2140009	2
11	Piston set	3B31-80L	2	34	Filter element	2142002	2
12	Rod set	3B33-P2346	1	35	Rod set	3B33-P2337	1
13	Crank rod bush(2 pieces)	2316001-B	3	36	Exhaust three way pipe	2N09-06H06T06H2	1
14	Crankcase	3301017	1	37	Cylinder head	3101043	1
15	Oil draining plug	2N33-002	1	38	Allen bolt set	3B01-M06*040V	4
16	Oil sight gauge set	2303012A	1	39	In.& Ex.valve assembly	3B13-K5065C	1
17	Oil filling plug set	2319004B	1	40	Cylinder	3201029	1
18	Bearing	2N35-6306	2	41	Piston ring set	3B32-65N	1
19	Crankshaft & balancer	3304025	1	42	Piston set	3B31-T65	1
20	Pulley key	2N47-63*09	1	43	Rod set	3B33-T5048	1
21	Rear bearing seat gasket	2G06-002	1	44	Exhaust elbow	2N06-06T06T85	1
22	Oil mesh	2352002	1	45	Spare tank	3125001	1
23	Rear bearing seat	3311003	1	46	Pressure relief valve	2406020A	1

63 Morrow Road, Barrie, Ontario, Canada L4N 3V7 Phone: 1-800-668-8448 Fax: (705) 721-8646 www.omegacompressors.com