OMEGA COMPRESSORS

For us, it's not just business. It's personal.

BF-0380

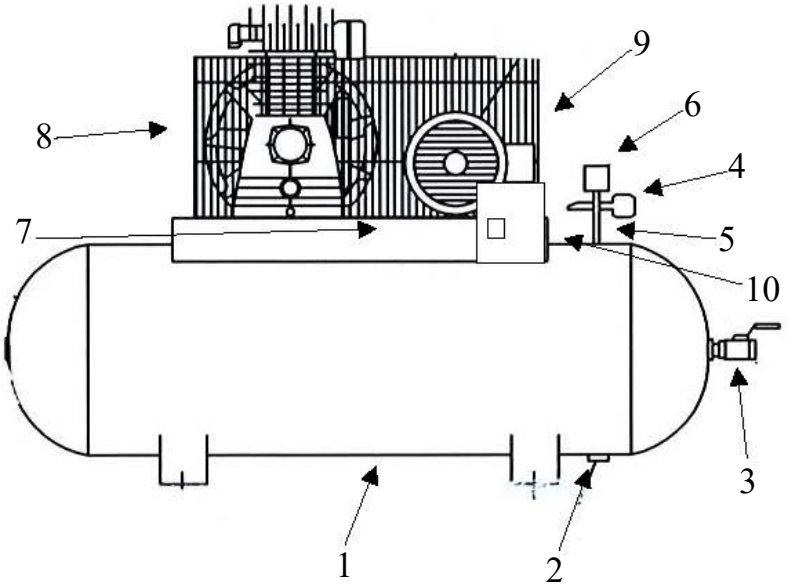

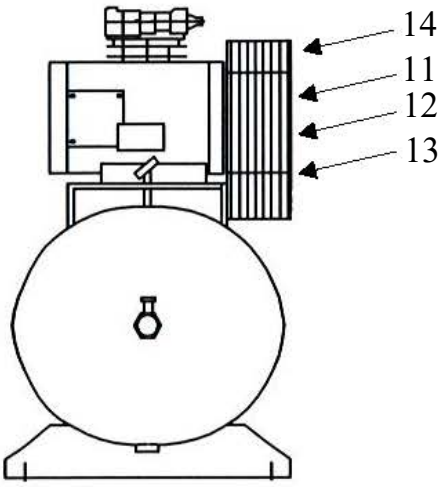

Spare Parts List

Ref. No.	Description	Part Number	Qty.
1	Horizontal Receiver	AR-H80	1
2	Ball Valve	BV-25	1
3	Ball Valve	BV-75	1
4	Premium Gauge	GAD-20B2-300	1
5	Safety Valve	SV25-140	1
6	Pressure Switch	PSHD-U7090	1
7	Check Valve	CV-N751075ST	1
8	Pump	BF-50	1
9	Motor	MO-03-01	1
		MO-03-02	1
		MO-03-03	1
		MO-03-04	1
		MO-03-05	1
10	Magnetic Starter	MS-03-01	1
		MS-03-02	1
		MS-03-03	1
		MS-03-04	1
		MS-03-05	1
11	Sheave/Pulley	2MAL62	1
12	Bushing	LX1-1/8	1
13	A67 Belt	VBA67	2
14	Belt Guard	BG-2A	1

OMEGA COMPRESSORS

For us, it's not just business. It's personal.

MODEL : BF50

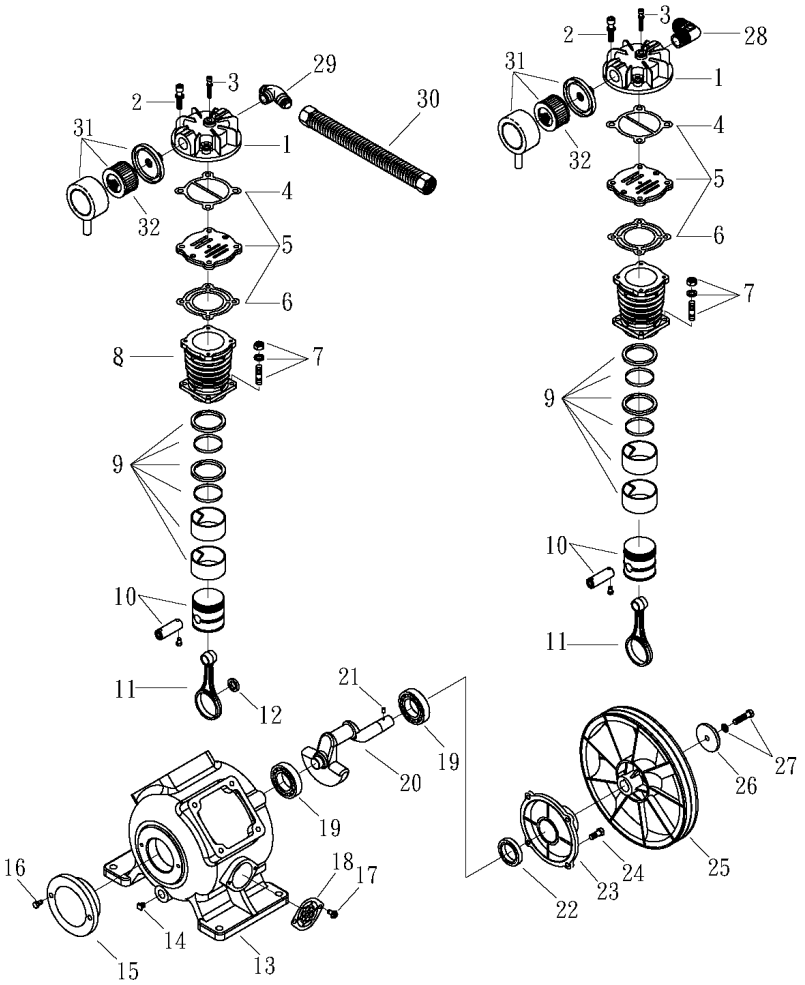

SPARE PARTS LIST

NO : QC-2012

REF. NO.	DESCRIPTION	PART NO.	QTY.	REF. NO.	DESCRIPTION	PART NO.	QTY.
1	Cylinder head	3101085AB	2	17	Bolt	2B00-FM05*010WB	4
2	Allen bolt set	3B01-M10*055V	8	18	Breather cover set	3321010	2
3	Allen bolt set	3B01-M06*052Z	2	19	Bearing	2N35-6307LLU	2
4	Cylinder head gasket	2G01-029C	2	20	Crankshaft & balancer	3304111	1
5	Inlet&Exhaust valve assembly	3B13-K95B95	2	21	Pulley key	2N47-63*09	1
6	Valve seat gasket	2G03-020C	2	22	Oil seal	2N50-TC30*50*11	1
7	Double head screw set	3B11-003-A	8	23	Rear bearing seat	3311042	1
8	Cylinder	3201095	2	24	Hexagon bolt	2B00-SM10*025	4
9	Piston ring set	3B32-BF5090	2	25	Pulley	3PBF-160A230M	1
10	Piston set	3B31-BF5090	2	26	Plate washer	2B34-13*52*14	1
11	Rod set	3B33-BF50	2	27	Hexagon bolt	3B00-SM12*050V	1
12	Bushing	3156103	1	28	Exhaust elbow	3N06-10T10HP	1
13	Crankcase	3301144	1	29	Exhaust three way pipe	3N09-10H10T10H3P	1
14	Oil draining plug	2N33-002	1	30	Exhaust tube set	3B2-10*420	1
15	Front cover	3309051A	1	31	Air filter	2140009	2
16	Hexagon bolt	2B00-SM08*025	2	32	Filter element	2142002	2