OMEGA COMPRESSORS

For us, it's not just business. It's personal.

CODE/ADDENDA 2004/2005 APPROVED TA
RELEASED FOR PRODUCTION
Q.C. ____ DATE ____

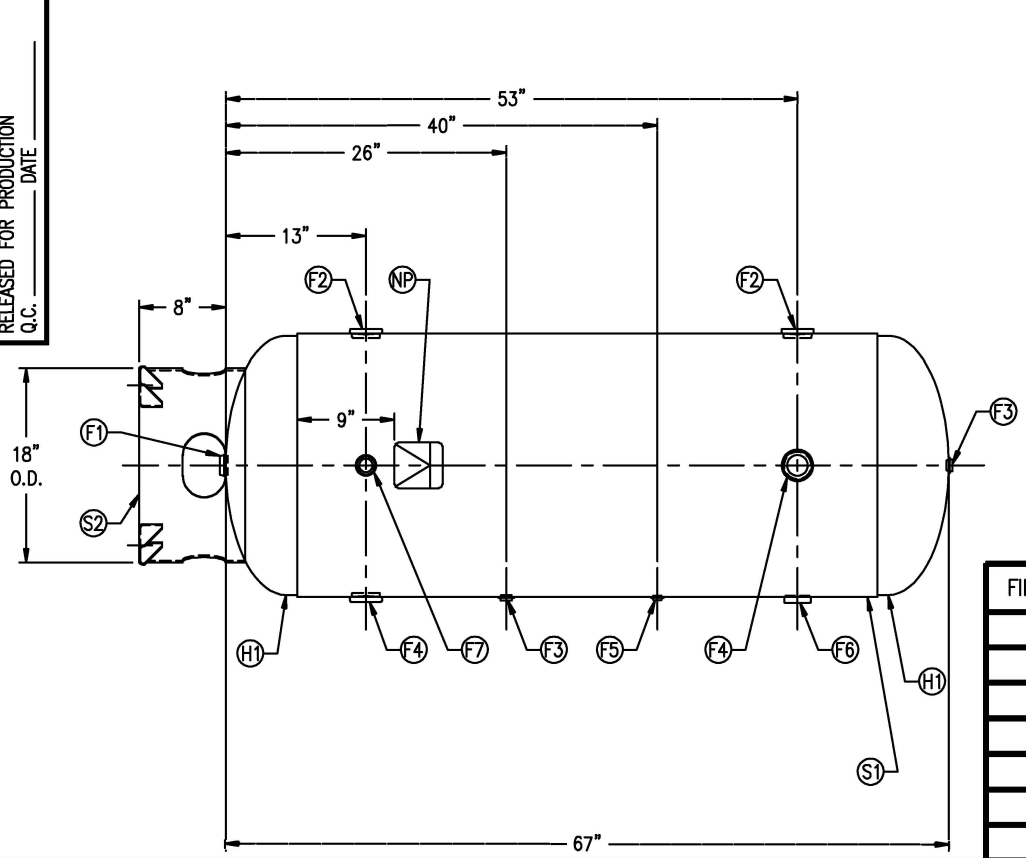

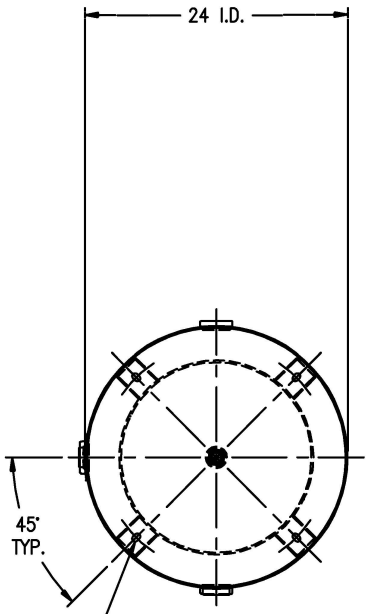

FIND NO.	NPT SIZE
F1	1
F2	2
F3	1/2
F4	2
F5	1/4
F6	1 1/2
F7	1

SYM	DATE	BY	REVISION	APP	XREF REV.	NOTES
					C1097 A	

SPECIFICATIONS

I.D. 24 LGTH. 67
MAWP 200 PSI @ 650 °F

GAL. 120 S.A. 37.5
WT. 325# CU.FT. 16.0

CRN E7400.2C

CODE: ASME SEC. VIII DIV. I, LATEST EDITION & ADDENDA

WELD DETAILS: M-1932
STD. TOLERANCES (UNLESS OTHERWISE NOTED): M-2461

OMEGA COMPRESSORS

VERTICAL AIR RECEIVER

DRAWN BY | DATE | SCALE: NONE
APP. BY | DATE | DRAWING NO. AR-V120R

63 Morrow Road, Barrie, Ontario, Canada L4N 3V7 Phone: 1-800-668-8448 Fax: (705) 721-8646 www.omegacompressors.com